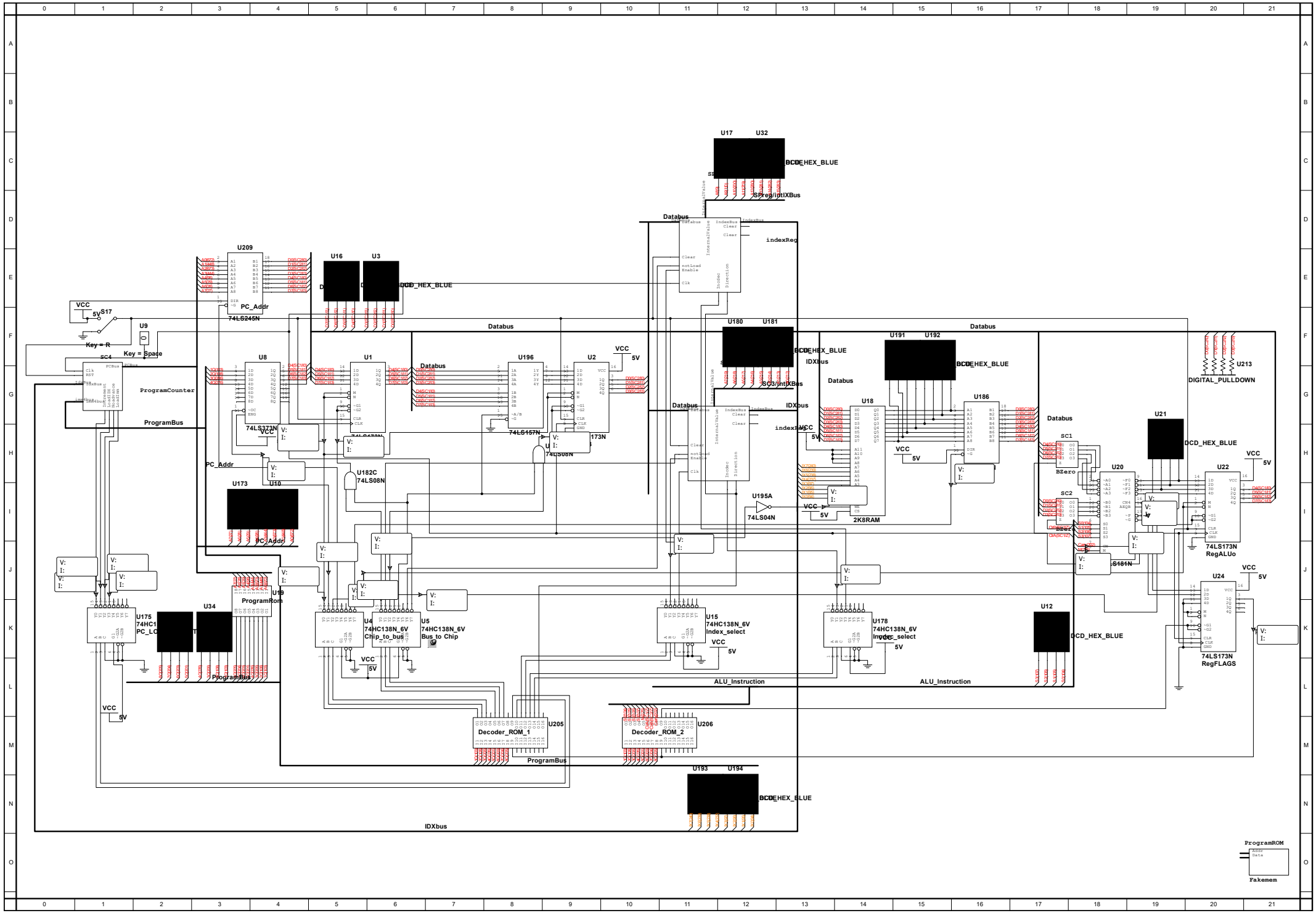
U17
U32
BCD_HEX_BLUE
SPreg/intIXBus
Databus
indexReg
U209
PC_Addr
74LS245N
U16
U3
VCC
5V
S17
Key = R
U9
Key = Space
SC4
ProgramCounter
ProgramBus
U8
74LS373N
U1
U196
74LS157N
U2
173N
U182C
74LS08N
U173
U10
PC_Addr
U180
U181
IDXbus
SC3/intXBus
U191
U192
U18
2K8RAM
U186
U195A
74LS04N
U213
DIGITAL_PULLDOWN
U21
SC1
BZero
SC2
U20
U22
74LS173N
RegALUo
U24
74LS173N
RegFLAGS
U12
U175
74HC1
PC_LO
U34
U19
ProgramRom
U4
74HC138N_6V
Chip_to_bus
U5
74HC138N_6V
Bus to Chip
U15
74HC138N_6V
Index_select
U178
74HC138N_6V
Index_select
ALU_Instruction
U205
Decoder_ROM_1
U206
Decoder_ROM_2
U193
U194
ProgramROM
Addr
Data
Fakemem

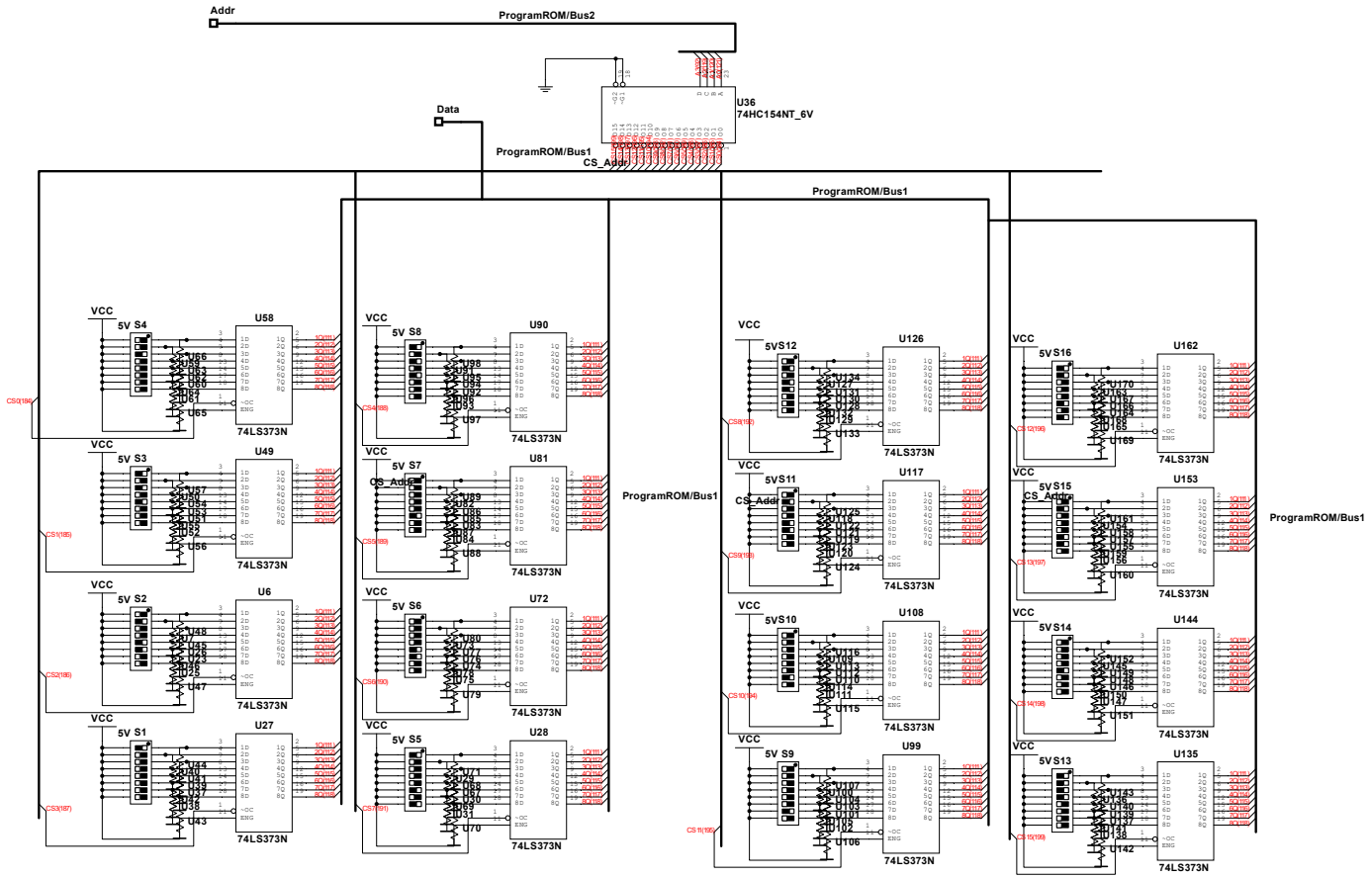
Addr
ProgramROM/Bus2
U36
74HC154NT_6V
Data
ProgramROM/Bus1
CS_Addr
ProgramROM/Bus1
VCC
5V S4
U58
74LS373N
5V S3
U49
5V S2
U6
5V S1
U27
5V S8
U90
5V S7
U81
5V S6
U72
5V S5
U28
5V S12
U126
5V S11
U117
5V S10
U108
5V S9
U99
5V S16
U162
5V S15
U153
5V S14
U144
5V S13
U135
ProgramROM/Bus1

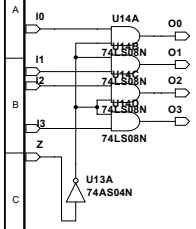
I0
U14A
O0
U14B
74LS08N
I1
O1
U14C
74LS08N
I2
O2
U14D
74LS08N
O3
I3
74LS08N
Z
U13A
74AS04N

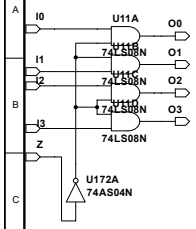
I0
U11A
O0
U11B
74LS08N
I1
O1
U11C
74LS08N
I2
O2
U11D
74LS08N
O3
I3
74LS08N
Z
U172A
74AS04N

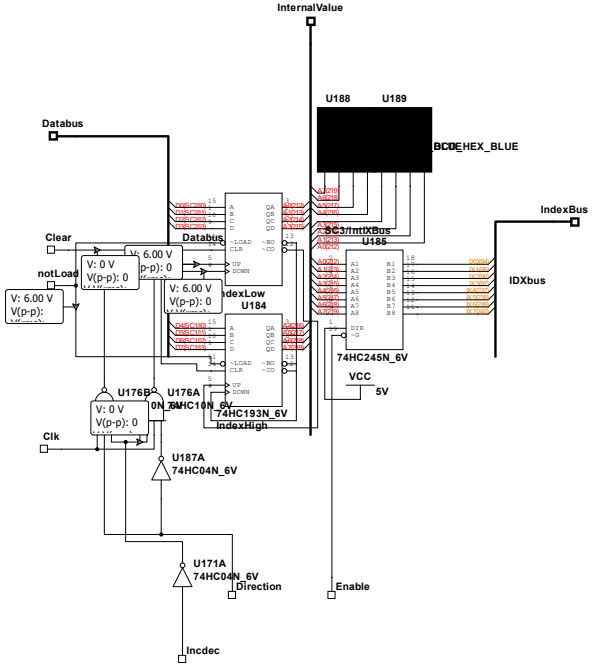
InternalValue
U188
U189
BCDEHEX_BLUE
Databus
IndexBus
Clear
notLoad
Clk
Databus
IndexLow
U184
IndexHigh
74HC193N_6V
U185
74HC245N_6V
IDXbus
VCC
5V
U176B
U176A
74HC10N_6V
U187A
74HC04N_6V
U171A
74HC04N_6V
Direction
Enable
Incdec
V: 0 V
V(p-p): 0
V: 6.00 V
V(p-p): 0

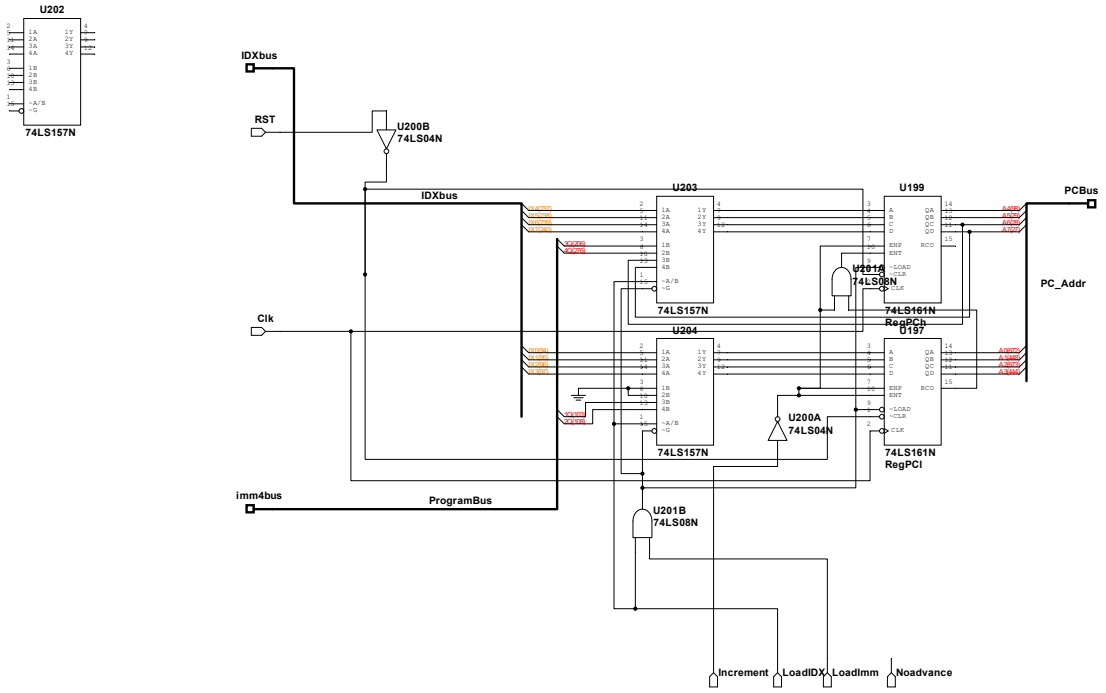
U202
74LS157N
IDXbus
RST
U200B
74LS04N
IDXbus
U203
74LS157N
U199
74LS161N
RegPCh
PCBus
PC_Addr
U201A
74LS08N
Clk
U204
74LS157N
U197
74LS161N
RegPCl
U200A
74LS04N
imm4bus
ProgramBus
U201B
74LS08N
Increment
LoadIDX
LoadImm
Noadvance

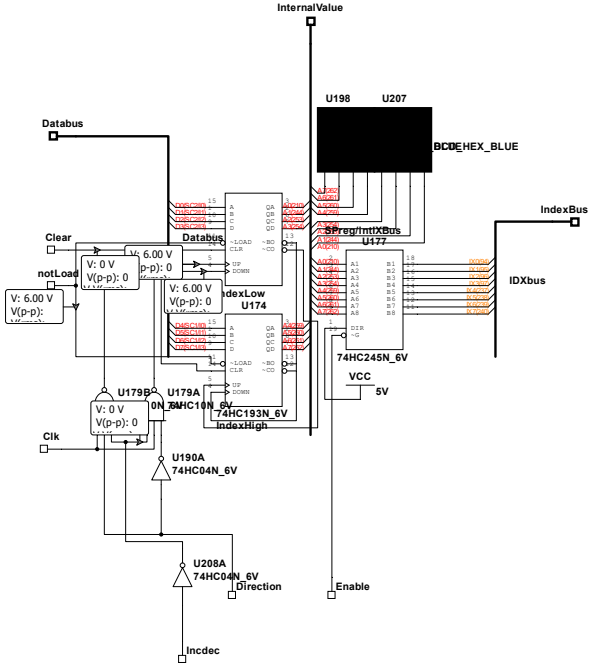
InternalValue
U198
U207
BCDEHEX_BLUE
Databus
Clear
notLoad
V: 0 V
V(p-p): 0
V: 6.00 V
V(p-p): 0
Databus
SPreg/IntIXBus
U177
IndexBus
IDXbus
IndexLow
U174
74HC193N_6V
IndexHigh
74HC245N_6V
VCC
5V
U179B
U179A
74HC10N_6V
Clk
U190A
74HC04N_6V
U208A
74HC04N_6V
Direction
Enable
Incdec